Polymarble Top 1500mm

Technical Specification

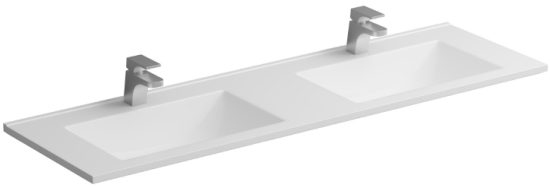

* Tap not included

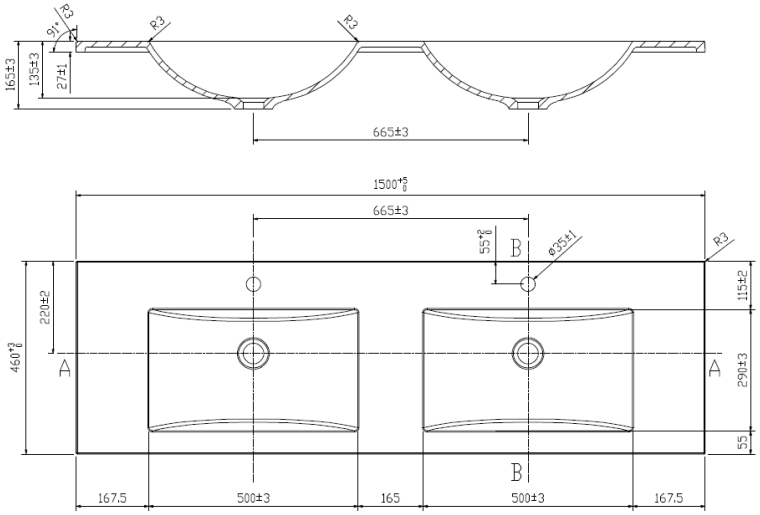

Description

Polymarble Top to suit 1500mm Neko Vanity Double Bowl 2x1TH

NV212221 White

Attributes

- 27mm thickness
- Gloss White Finish
- Require 40mm waste (not included)
- No overflow

*All dimensions are in millimeters and are subject to normal manufacturing variations. Actual dimensions should be checked prior to installation. Neko pursues a policy of continuing improvement in design and performance of its products. The right is therefore reserved to vary specifications without notice.